REV	REVISION RECORD	SIGN	DATE				
A	First Issue	YZD		D	Change LENS V.A and tear tape	Jim	
B	Change LENS VA	YZD		E	Change IC	Jim	
C	Change LENS OD	YZD		F	Change color of Key		
				G	Add label		

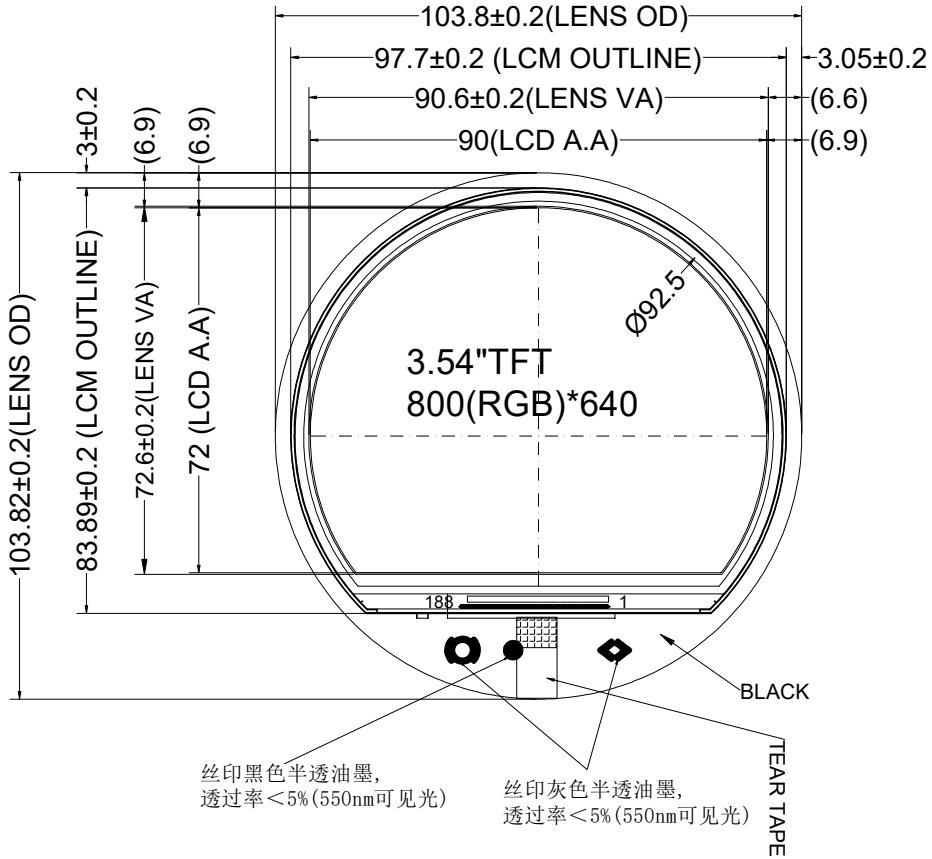

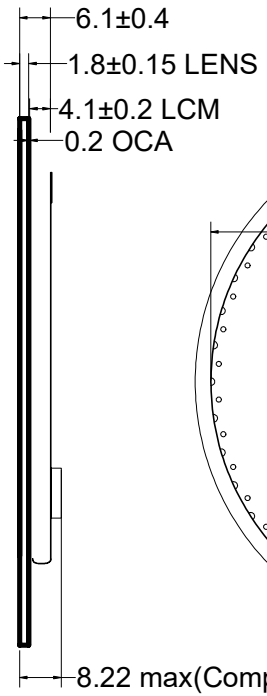

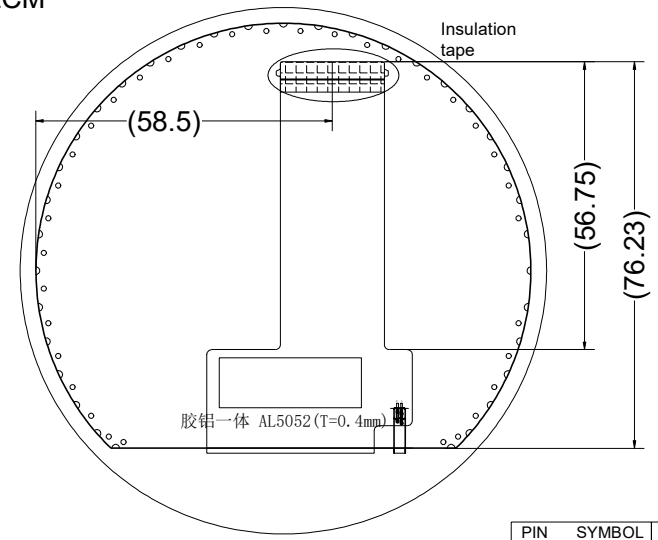

PIN	SYMBOL	PIN	SYMBOL
1	GLED	21	G6
2	GLED	22	G7
3	VLED	23	B0
4	VLED	24	B1
5	GND	25	B2
6	VDD	26	B3
7	R0	27	B4
8	R1	28	B5
9	R2	29	B6
10	R3	30	B7
11	R4	31	GND
12	R5	32	DCLK
13	R6	33	DISP
14	R7	34	HS
15	G0	35	VS
16	G1	36	DE
17	G2	37	VDD_OTP
18	G3	38	SDA
19	G4	39	SCL
20	G5	40	CS

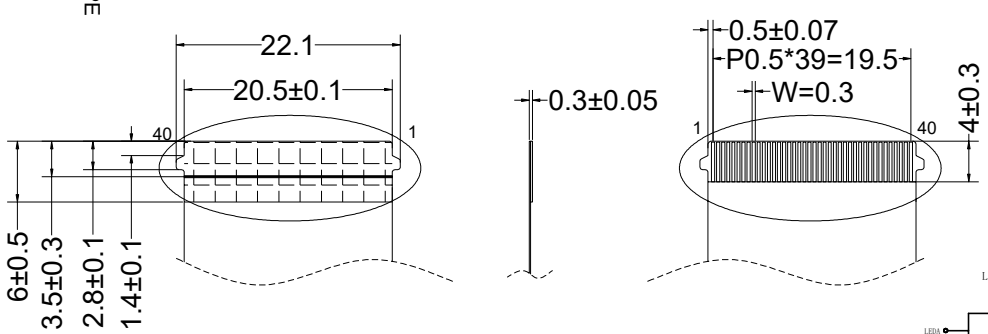

Detail 2:1

LED CIRCUIT DIAGRAM:

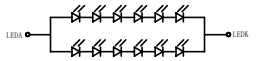

If=180mA Vf=16.8~20.4V

1.COVER LENS材质：
表面硬度 ≥6H(750gf),CS>450Mpa,DOL>8um;
2、Glass厚度: 1.8mm ，视窗区丝印公差：±0.15mm;
3.油墨总厚度≤20um
4.不可有刮伤或异物，请注意洁净度，
5.落球条件：130g/50cm，中心点三次OK；高温高湿条件：+80℃/RH95%/2
6.按键丝印未注公差+/-0.03mm，其它未注公差+/-0.1mm，*标号尺寸为重点管
7.符合ROHS标准；
8.紫外线箱实验：8H 灯照 0.75W/m² 60℃ 20分加湿冷凝 50℃，湿度60% 120T

Screen Size:	3.54(inch)	OP Temperature:	-30~+85°C	Backlight Characters:	180mA	Kingtech Group Co.,Ltd	Outline	NAME: PV035400D0140A-LO	
View Direction:	Full view	ST Temperature:	-40~+90°C	Luminance + LED:	830nit/27PCS		VER:G	U: mm	S: 1:1 Date: 20230823
Grey scale:		Analog Voltage:	3.3V	Driver IC :	FL5893		APPROVED	CHECKED	DRAWN
Display mode:	IPS	Digital Voltage:		Reminder :		ROHS must be complied Unspecificated tolerlance is ±0.25mm			